LADOX FLOOR STANDING RACK CABINET ASSEMBLING INFORMATION

when assembling the cabinet, please start from this screw

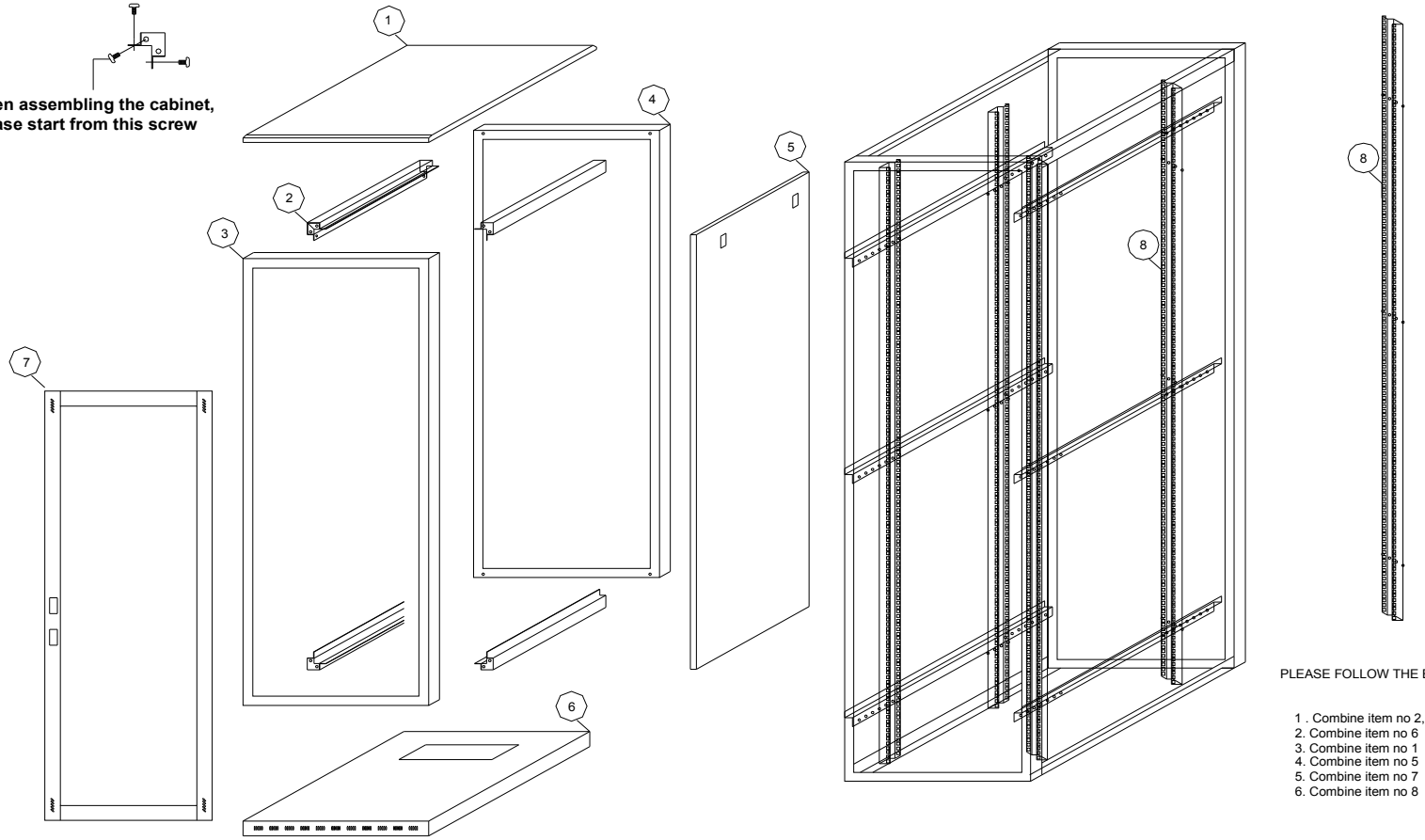

PLEASE FOLLOW THE BELOW STEPS

1 . Combine item no 2,3 and 4
2. Combine item no 6
3. Combine item no 1
4. Combine item no 5
5. Combine item no 7
6. Combine item no 8